Communication SIPROTEC 4 devices via PROFIBUS and fiber-optic double ring structure
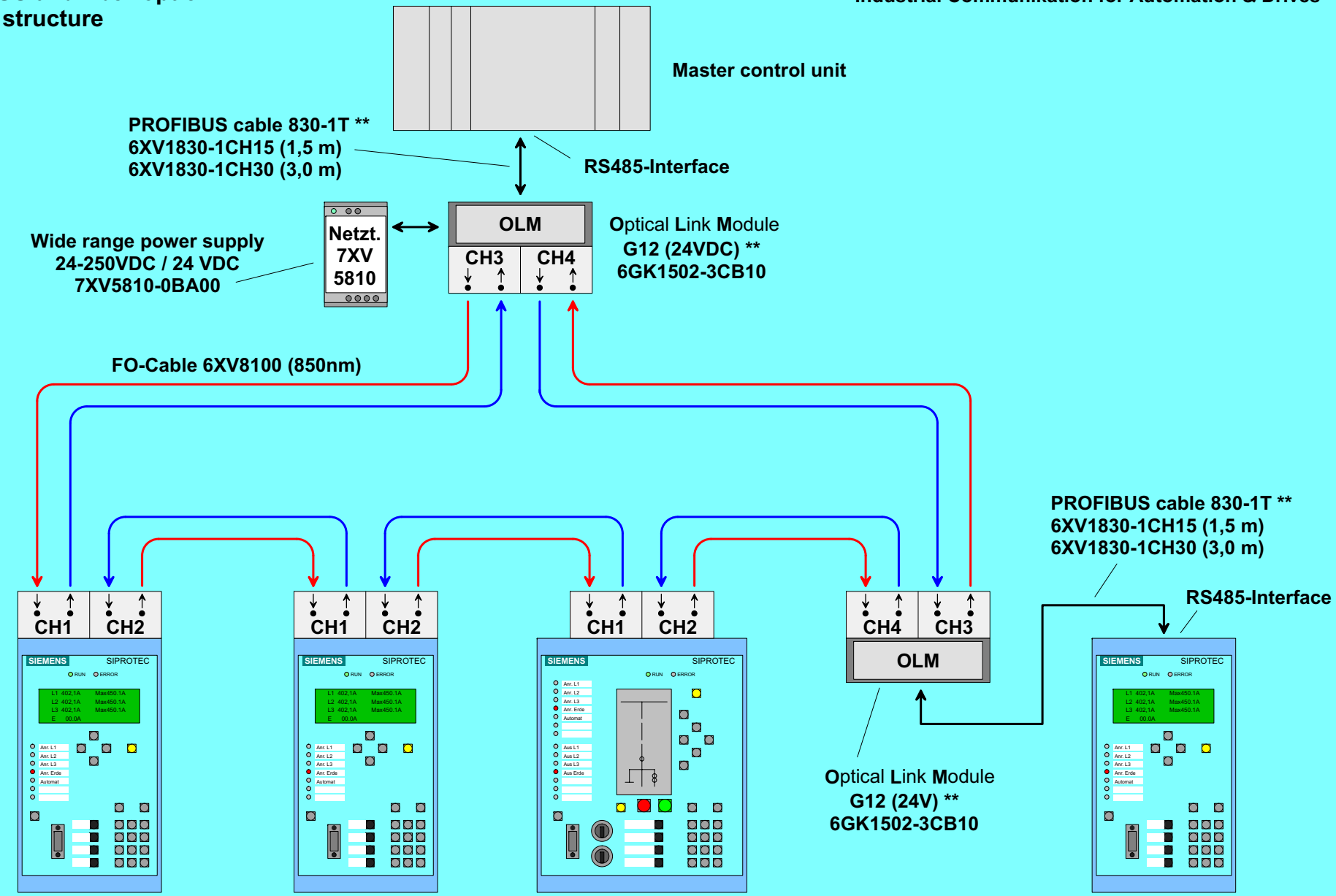
** source: Catalog "Siemens IK PI - 2004"
"Industrial Communikation for Automation & Drives"