IF IN DOUBT ASK
DO NOT SCALE

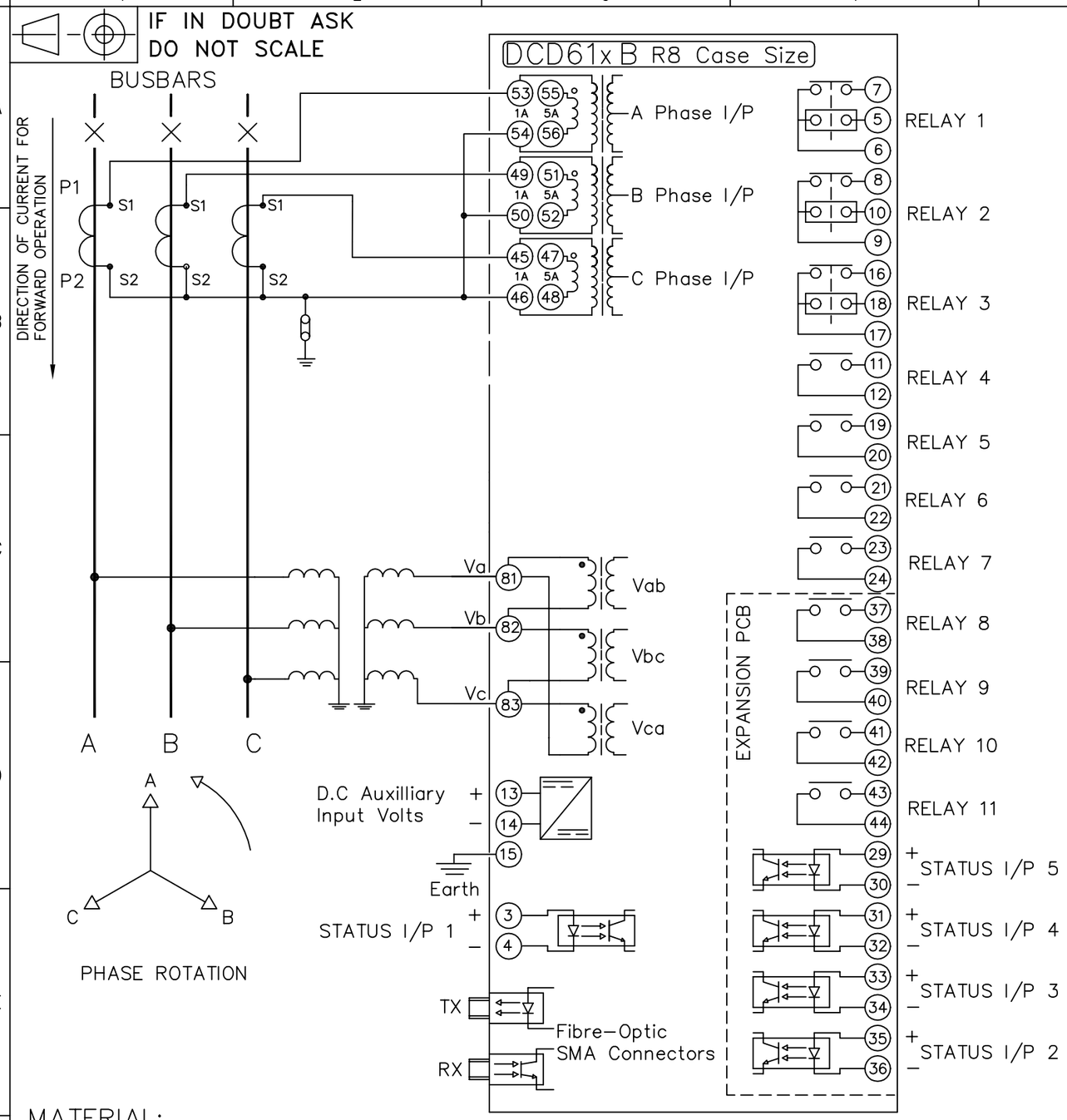

TERMINAL BLOCKS VIEWED FROM REAR

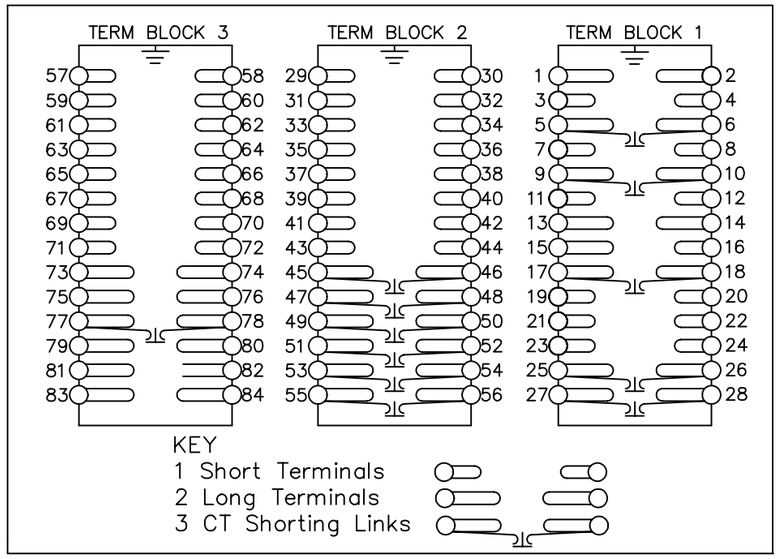

NOTES

1 CT CIRCUITS ARE SHOWN CONNECTED TO RELAY 1 AMP TAP.USE ALTERNATIVE TAP FOR 5AMP RATED CTs.
2 CT & EARTH CONNECTIONS ARE TYPICAL ONLY.
3 FOR TERMINAL DIAGRAM SEE 2434W20003 (A2)
4 DRG SHOWS OPTION B (11 O/P. 5 I/P).

NOT SUBJECT TO UPDATE ONCE COPIED / PRINTED OR DOWNLOADED

ISSUE	DATE	CHANGE NOTED
2	16/10/97	MN434/103
1	16/10/97	

Copyright © Reyrolle Ltd.

MATERIAL:

Dimensions in millimetres : Surface texture in micrometres.
Machine where marked ✓
For explanation of dimensions, tolerances, notes etc. see B.S.308.
Limit on untoleranced unmachined dimensions ± _____
Limits on untoleranced machined dimensions to B.S.4500;
i.e. up to 6±0.1; over 30 to 120±0.3; over 315±0.8;
over 6 to 30±0.2; over 120 to 315±0.5;
General unmachined angular tolerance ± _____

Finish:

Treatment:

Title: TYPICAL SCHEME DIAGRAM FOR 3 PHASE DIRECTIONAL. DCD OVERCURRENT RELAY

Reyrolle Protection Hebburn.

Original Scale. NTS

First used on:
Similar Articles: 2434W10036
Supersedes:

Drg. No. 2434W10021

DRAWN	CHECKED	APPROVED	DATE	IE	OPS	PCP	Purch.Spec.	TQ	EAC	CE	STD	A3
M LEASK		R.D.WATSON	23/07/02									