APP.

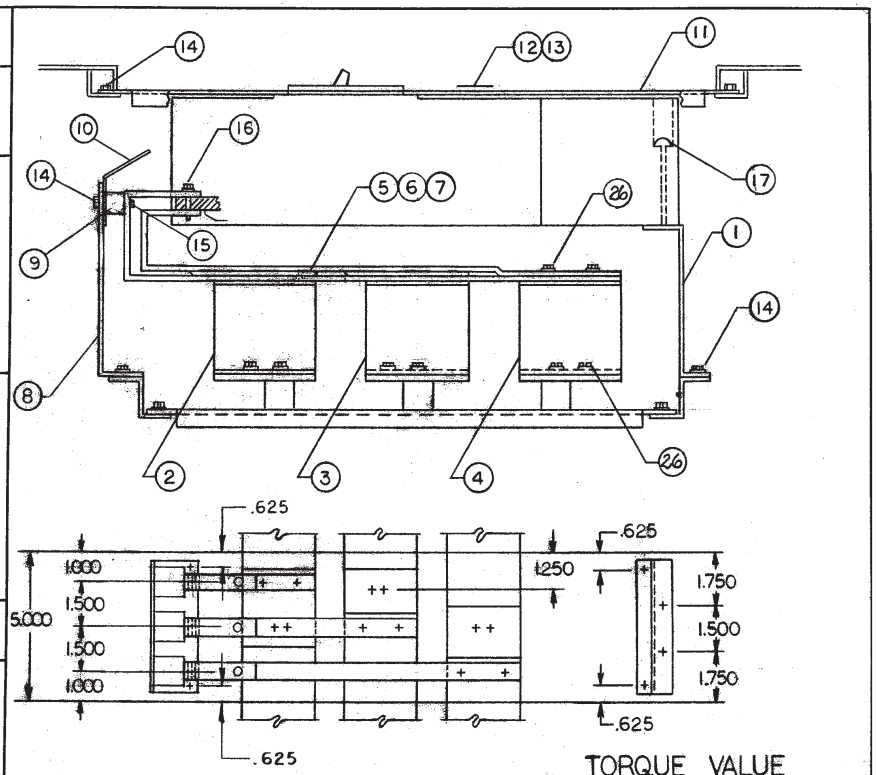


TORQUE VALUE

(16) 50 IN-LBS. AL.

(16)(17) 72 IN-LBS. CU.

CFD6 Frame Branch Breaker
70 - 250 Ampere
Single Mounting

**⚠ DANGER**

Hazardous voltage.
Will cause death or serious injury.

Keep out.
Qualified personnel only.
Disconnect and lock off all power before working on this equipment.

REVISIONS 0-613
1-635 - REVISED SUPPORT BRACKET
2-663: CHANGED BRANCH BUS CONSTRUCTION ELEMN.
LINE BUS ADDED BRANCH BUS BARRIER REUMBERED
REV. 3-681 MOVED BOLT ON 08 FROM RIGHT TO LEFT (15)
4: 8A093 - 7/14/88
5: 1A106 - 8/14/90

CHK. SH 10/9/90

BY [illegible] 9-24-82

For I-T-E Type CLF, CFD6 Breakers

| Siemens Industry, Inc. Norcross, GA | CFD6 BREAKER MOUNTING SERIES 6 BRANCH BUS | 11-5383-00 | 5 |
|---|---|---|---|
| | TITLE | DWG. NO. | REV. |

FOR USE WITH CFD6 FRAME BREAKERS MOUNTED IN SPP/FPP/S5/F2/P5 PANELBOARDS (DEEP BOX).

Apvd SH 9-19-89

8:1E-166B 12-11-09

4: 1B-190 1-24-92
5: 1B-908 5-13-95
6:1C-831A 4-12-04
7:1C-831B 7-25-06

Revisions 0:1A-066
1:1A-106
2:1A-280-B 1-31-91
3:1A-232 03-12-91

Chk SH 9-19-89

By F 2-10-89

| ITEM | DESCRIPTION | PC. NO. | QTY. |
|---|---|---|---|
| 1 | BREAKER SUPPORT BRACKET | 15-B-3020-02 | 1 |
| 2 | PHASE A CONNECTOR BUS | 12-7144-01 | 1 |
| 3 | PHASE B CONNECTOR BUS | 12-7145-01 | 1 |
| 4 | PHASE C CONNECTOR BUS | 12-7146-01 | 1 |
| 5 | PHASE A BRANCH BUS | 12-7143-01 | 1 |
| 6 | PHASE B BRANCH BUS | 12-7143-02 | 1 |
| 7 | PHASE C BRANCH BUS | 12-7143-03 | 1 |
| 8 | BUS SUPPORT BRACKET | 12-6257-01 | 1 |
| 9 | STAND-OFF INSULATOR | 11-1800-01 | 3 |
| 10 | BRANCH BUS BARRIER | 11-7715-01 | 1 |
| 11 | 5" FRONT PLATE | 12-6029-02 | 1 |
| 12 | CIRCUIT ID CARD | 11-7505-01 | 1 |
| 13 | CARD HOLDER | 11-7506-01 | 1 |
| 14 | 1/4-20 X 3/8 SHWHSW | 11-1553-02 | 9 |
| 15 | STRAP-BUS HARDWARE KIT | 11-B-2022-05 | 2 |
| 16 | 1/4-20 X 1 7/16 SHWHSW | 11-1553-13 | 3 |
| 17 | 1/4-20 X 4 SRHMS | 11-1542-19 | 2 |
| 18 | NEUTRAL LUG ASSEMBLY | 12-B-2105-05 | 1 |
| 19 | | | |
| 20 | | | |
| 21 | | | |
| 22 | | | |
| 23 | BLANK FILLER | 12-5531-10 | 1 |
| 24 | | | |
| 25 | | | |
| ▲ 26 | STRAP-BUS HARDWARE KIT | 11-B-2022-05 | 2 |
| 27 | 10-24 X 5/8 RHSNB | 11-1630-02 | 2 |
| 28 | 10-24 LOCK NUT | 11-1821-02 | 2 |
| 29 | INSTRUCTION SHEET | 31-1220-01 | 1 |
| 30 | CARTON LABEL | 15-A-1027-01 | 1 |
| 31 | CARTON | 48001056 | 1 |
| 32 | | | |
| 33 | | | |
| 34 | | | |
| 35 | | | |
| | CFD6 FRAME BRANCH BREAKER - SINGLE MOUNTED | 70 - 250 AMPS | |
| | FOR TYPE CFD6 BREAKERS ▲ | | |
| | MERCHANDISE KIT NO. SCFD | | |

| Confidential – property of Siemens Industry, Inc. Norcross, GA | CFD6 BRANCH BREAKER MOUNTING S4/S5 COPPER BUS | 11-5383-02 Dwg No. | 8 |
|---|---|---|---|
| | Title | Sht. 1 Of 1 | Rev. |



Siemens Industry, Inc.
Norcross, GA

**CAT. NO. SCFD**