APP.

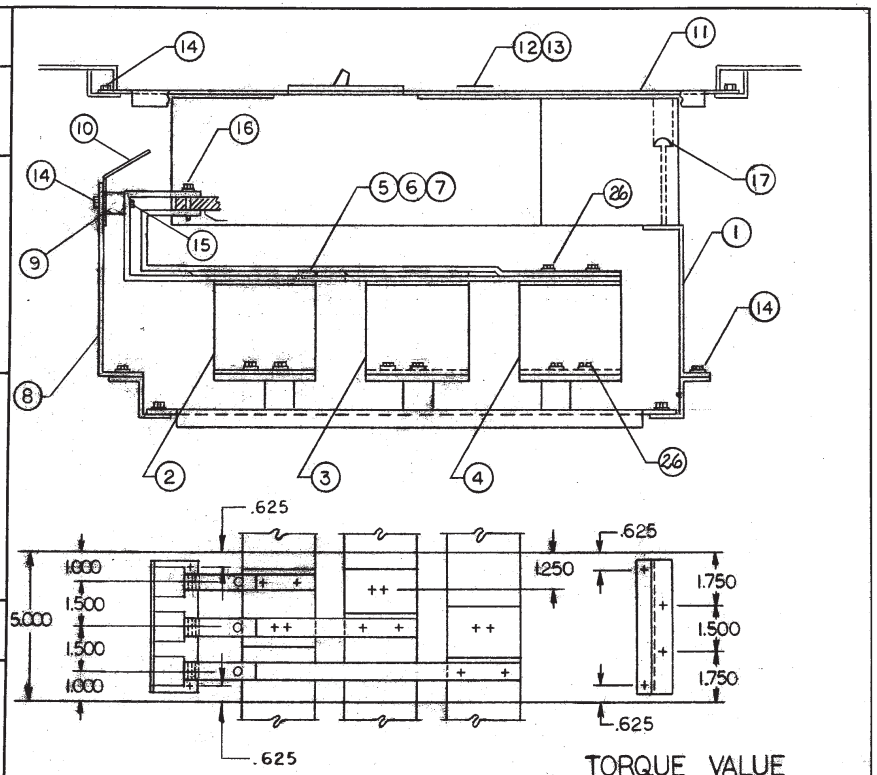

TORQUE VALUE

(16) 50 IN-LBS. AL.

(16)(17) 72 IN-LBS. CU.

CFD6 Frame Branch Breaker
70 - 250 Ampere
Single Mounting

⚠ DANGER

Hazardous voltage.
Will cause death or serious injury.

Keep out.
Qualified personnel only.
Disconnect and lock off all power before working on this equipment.

REVISIONS 0-613
1-635 - REVISED SUPPORT BRACKET
2-663: CHANGED BRANCH BUS CONSTRUCTION, ELEMN. LINE BUS, ADDED BRANCH BUS BARRIER, REUMBERED
REV. 3-681 MOVED BOLT ON 8 FROM RIGHT TO LEFT (15)
4: 8A093 - 7/14/88
5: 1A106 - 8/14/90

CHK. SH 10/9/90

BY [illegible] 9-24-82

For I-T-E Type CLF, CFD6 Breakers

Siemens Industry, Inc. Building Technologies Division	CFD6 BREAKER MOUNTING SERIES 6 BRANCH BUS	11-5383-00	5
	TITLE	DWG. NO.	REV.

FOR USE WITH CFD6 FRAME BREAKERS MOUNTED IN SPP/FPP/S5/F2/P5 PANELBOARDS (DEEP BOX).

Apvd SH 9-19-89

8:1E-166B 12-11-09

4: 1B-190 1-24-92
5: 1B-908 5-13-95
6:1C-831A 4-12-04
7:1C-831B 7-25-06

Revisions 0:1A-066
1:1A-106
2:1A-280-B 1-31-91
3:1A-232 03-12-91

Chk SH 9-19-89

By F 2-10-89

ITEM	DESCRIPTION	PC. NO.	QTY.
1	BREAKER SUPPORT BRACKET	15-B-3020-02	1
2	PHASE A CONNECTOR BUS	12-7144-01	1
3	PHASE B CONNECTOR BUS	12-7145-01	1
4	PHASE C CONNECTOR BUS	12-7146-01	1
5	PHASE A BRANCH BUS	12-7143-01	1
6	PHASE B BRANCH BUS	12-7143-02	1
7	PHASE C BRANCH BUS	12-7143-03	1
8	BUS SUPPORT BRACKET	12-6257-01	1
9	STAND-OFF INSULATOR	11-1800-01	3
10	BRANCH BUS BARRIER	11-7715-01	1
11	5" FRONT PLATE	12-6029-02	1
12	CIRCUIT ID CARD	11-7505-01	1
13	CARD HOLDER	11-7506-01	1
14	1/4-20 X 3/8 SHWHSW	11-1553-02	9
15	STRAP-BUS HARDWARE KIT	11-B-2022-05	2
16	1/4-20 X 1 7/16 SHWHSW	11-1553-13	3
17	1/4-20 X 4 SRHMS	11-1542-19	2
18	NEUTRAL LUG ASSEMBLY	12-B-2105-05	1
19			
20			
21			
22			
23	BLANK FILLER	12-5531-10	1
24			
25			
▲ 26	STRAP-BUS HARDWARE KIT	11-B-2022-05	2
27	10-24 X 5/8 RHSNB	11-1630-02	2
28	10-24 LOCK NUT	11-1821-02	2
29	INSTRUCTION SHEET	31-1220-01	1
30	CARTON LABEL	15-A-1027-01	1
31	CARTON	48001056	1
32			
33			
34			
35			
	CFD6 FRAME BRANCH BREAKER - SINGLE MOUNTED	70 - 250 AMPS	
	FOR TYPE CFD6 BREAKERS ▲		
	MERCHANDISE KIT NO. SCFD		

Confidential – property of Siemens Industry, Inc. Norcross, GA Building Technologies Division	CFD6 BRANCH BREAKER MOUNTING S4/S5 COPPER BUS	11-5383-02 Dwg No.	8
	Title	Sht. 1 Of 1	Rev.

Siemens Industry, Inc.
Building Technologies Division
Norcross, GA

CAT. NO. SCFD