Mounting set QRI2... (including heat insulator)

AGG2.110

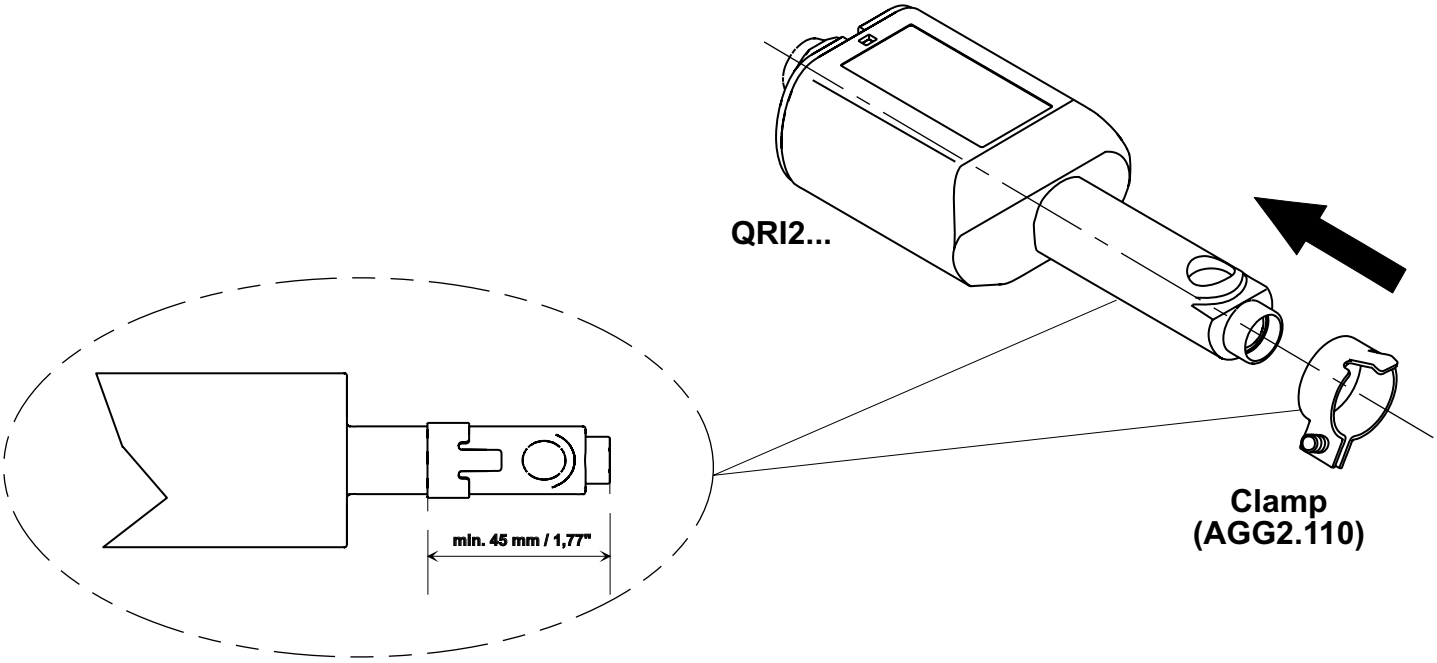

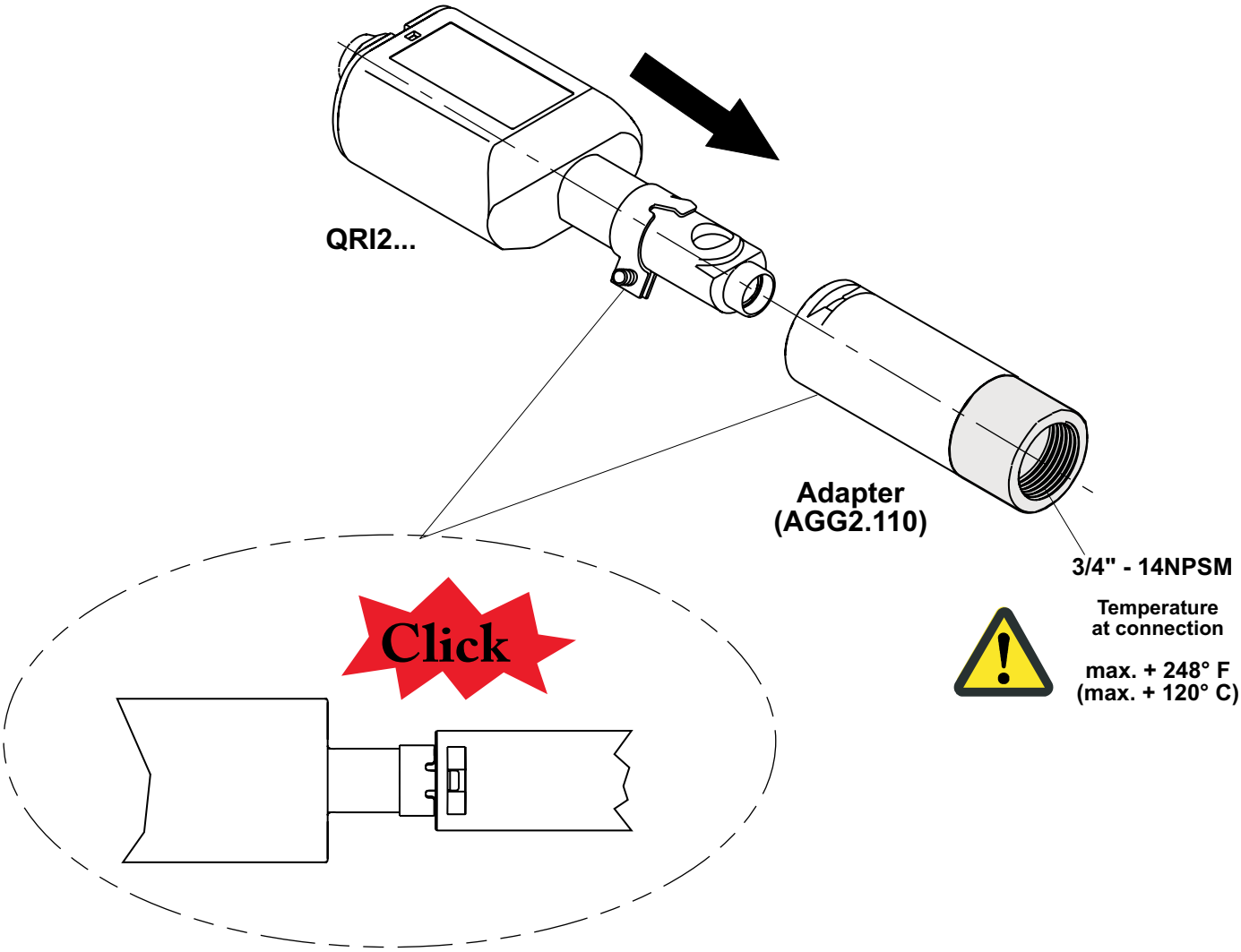

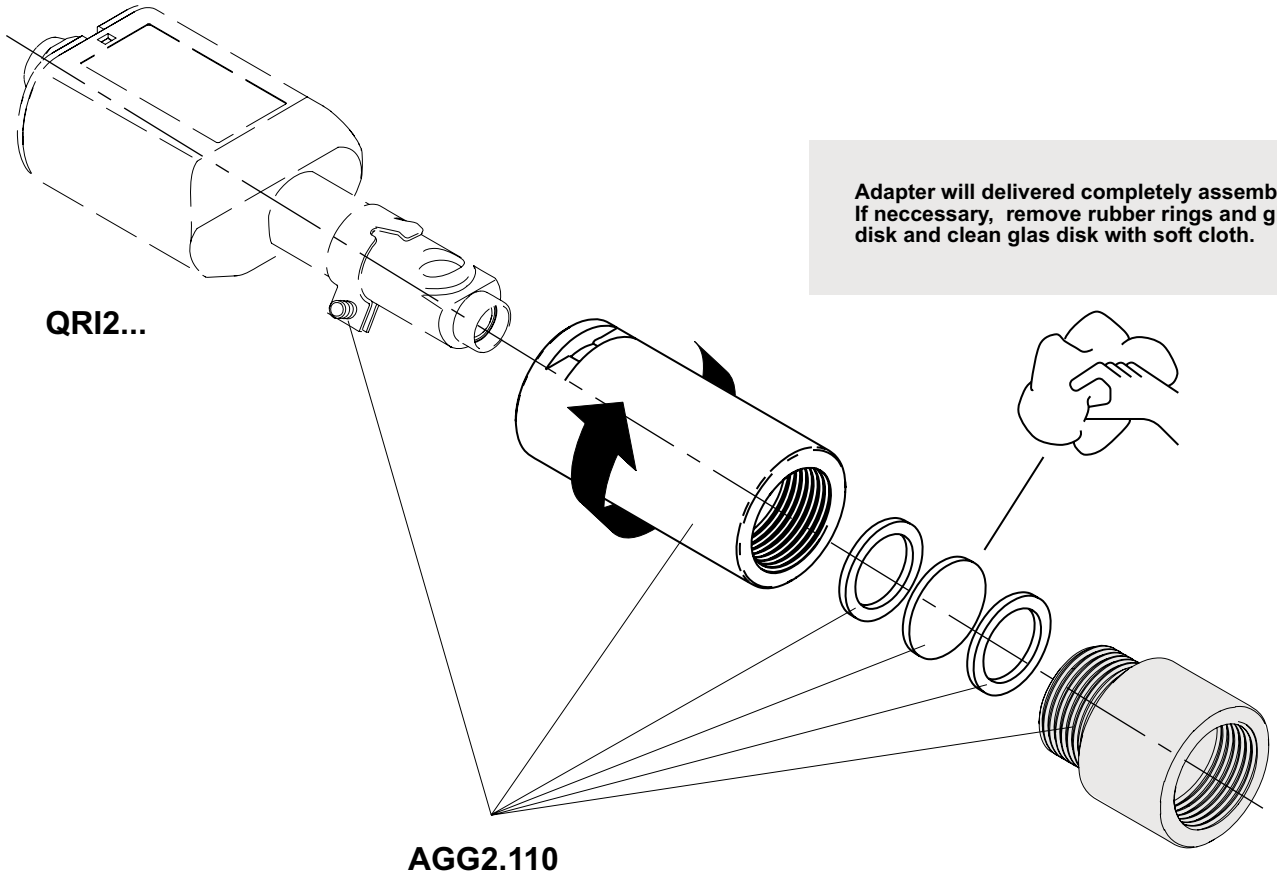

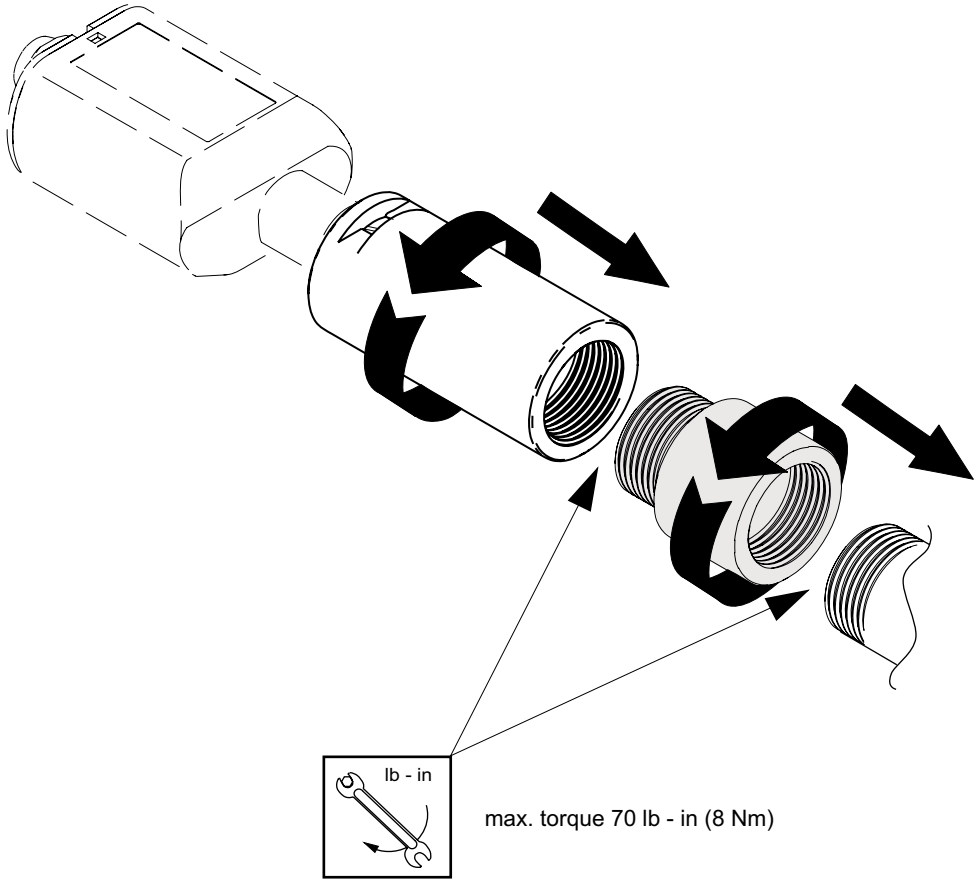

© 2010 Siemens AG